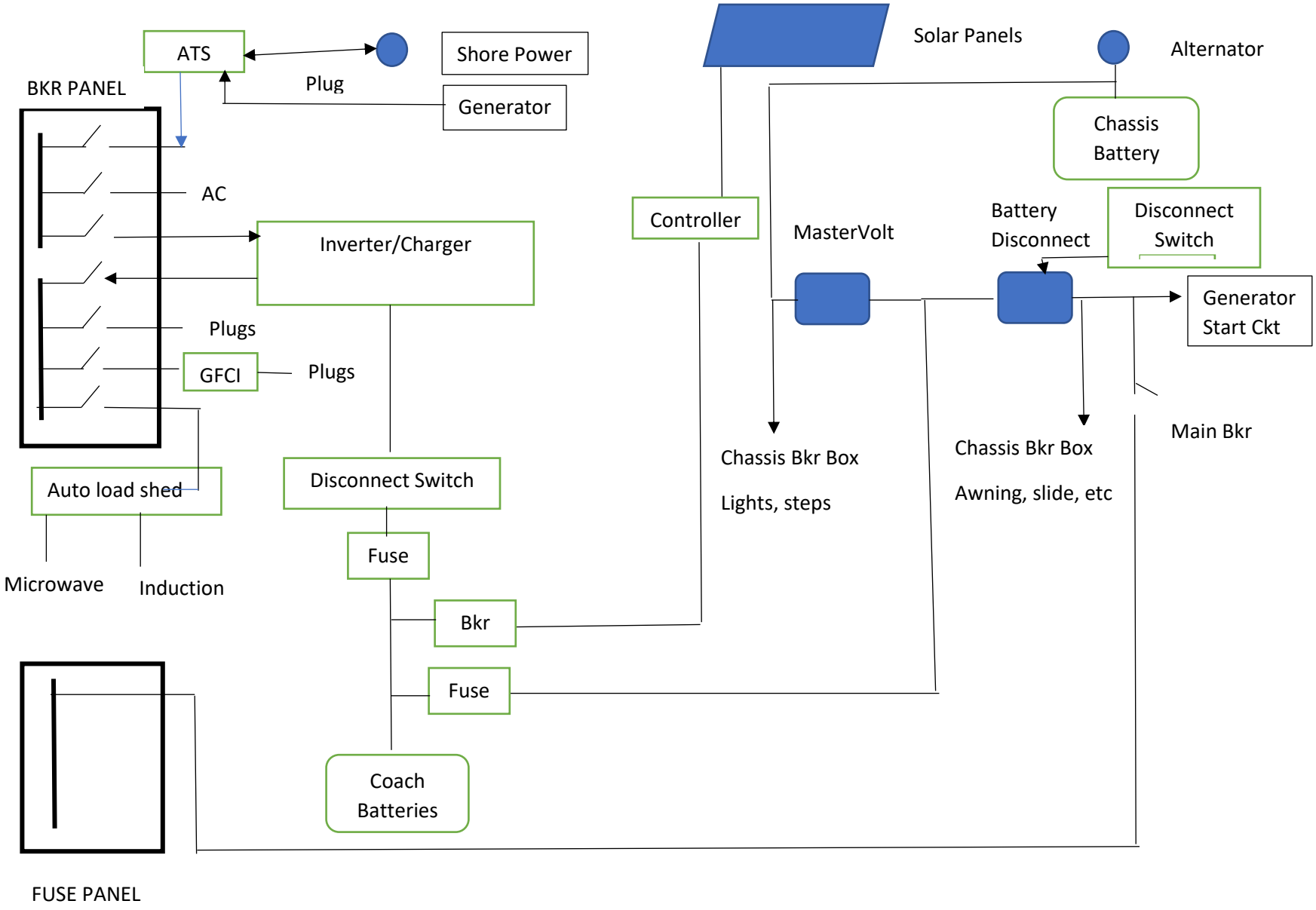
ATS
Shore Power
Plug
Generator
BKR PANEL
AC
Inverter/Charger
Plugs
GFCI
Plugs
Auto load shed
Microwave
Induction
Disconnect Switch
Fuse
Bkr
Fuse
Coach Batteries
FUSE PANEL
Solar Panels
Alternator
Chassis Battery
Controller
MasterVolt
Battery Disconnect
Disconnect Switch
Generator Start Ckt
Chassis Bkr Box
Lights, steps
Chassis Bkr Box
Awning, slide, etc
Main Bkr